DRAWING MADE IN THIRD ANGLE PROJECTION
THIS DRAWING IS UNPUBLISHED. RELEASED FOR PUBLICATION ,19 .
© COPYRIGHT 19 BY AMP INCORPORATED. ALL INTERNATIONAL RIGHTS RESERVED.

PROD CODE	LOC	DIST
5327	DF	F0

P	F	ZONE	LTR	DESCRIPTION	DATE	APPD
			B	REDWN PER DF-2766 TW	3-90	DS
			C	REV PER DF-5655 PY	10-91	DG
			D	REV PER DF-5332 AJG	1-92	DG
			E	REV PER DF-5470 TA	2-92	DG
	✓		E	REV PER 0600-1388-93 TA	5-4-94	DG
			G	REV PER 0600-2118-94 JB	12-07-94	DG

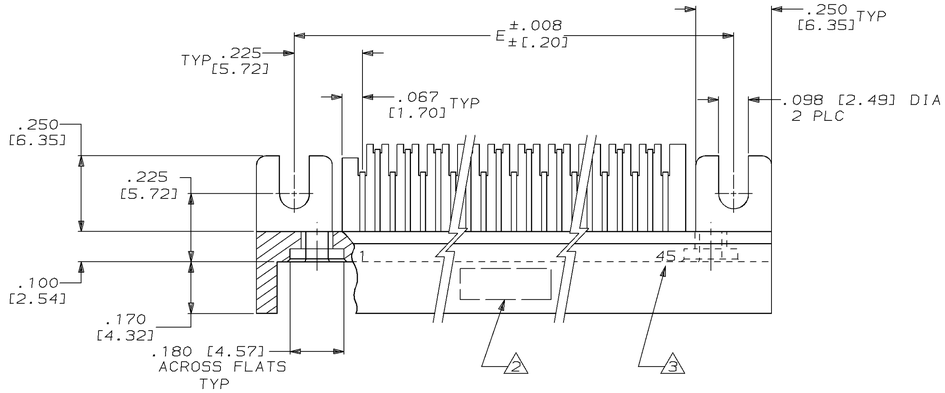

1. CONNECTOR MEETS ALL APPLICABLE REQUIREMENTS OF MIL-C-55302.
2. AMP,00779, AMP PART NO, MILITARY PART NO.(PER TABLE) AND DATE CODE MARKED IN THIS APPROXIMATE AREA.
3. END CAVITY IDENTIFICATION NUMBERS (PER TABLE) MARKED THIS SIDE ONLY.
4. EPOXY, FOR CONTACT RETENTION, APPLIED TO CONTACT ROWS IN THIS AREA.
5. FINISH: PLATED GOLD .000050 THK PER MIL-G-45204 ON MATING END FOR A LENGTH OF .100 MIN, TAILS PLATED TIN-LEAD .000120 THK, ALL OVER NICKEL .000050 THK PER QQ-N-290.
6. SPACE IN TONGUE NOT APPLICABLE FOR 20 THRU 50 POSITIONS.
8. HOUSING MATERIAL: LIQUID CRYSTAL POLYMER PER MIL-M-24519, GLCP-30F; COLOR: GRAY.

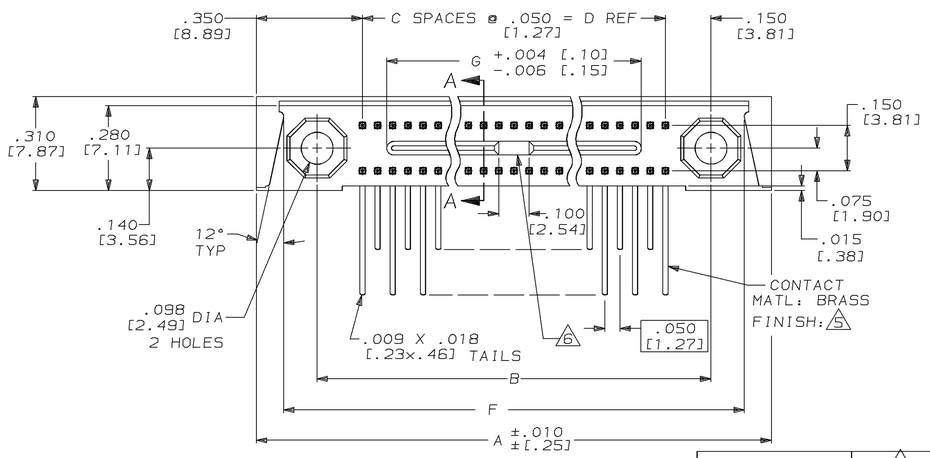

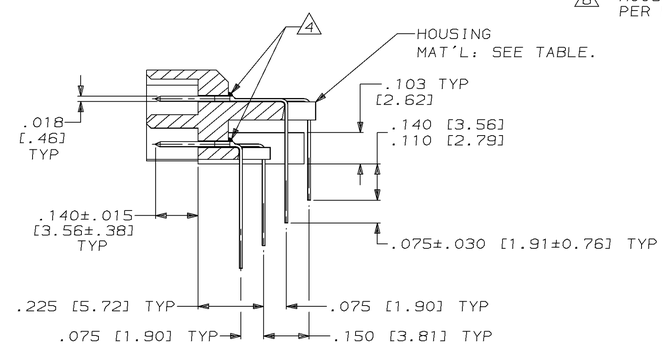

SECTION A–A
SCALE 4:1

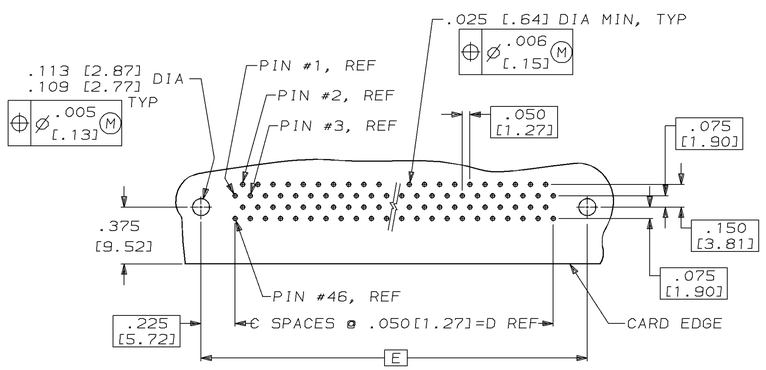

RECOMMENDED P.C. BOARD LAYOUT
(CONNECTOR SIDE)
SCALE: 2:1
90 POSN, REF

REMARKS	HSG MATERIAL	CAVITY IDENT 3	MILITARY PART NO 2	G	F	E	D	C	B	A	NO OF POSN	ASSEMBLY NUMBER
				DIMENSION								
	8	1 64	M55302/117-11	2.990 [75.95]	3.670 [93.22]	3.600 [91.44]	3.150 [80.01]	63	3.450 [87.63]	3.850 [97.79]	128	2-530743-2
	8	1 55	M55302/117-10	2.540 [64.52]	3.220 [81.79]	3.150 [80.01]	2.700 [68.58]	54	3.000 [76.20]	3.400 [86.36]	110	2-530743-1
	8	1 50	M55302/117-09	2.290 [58.17]	2.970 [75.44]	2.900 [73.66]	2.450 [62.23]	49	2.750 [69.85]	3.150 [80.01]	100	2-530743-0
	8	1 45	M55302/117-08	2.040 [51.82]	2.720 [69.09]	2.650 [67.31]	2.200 [55.88]	44	2.500 [63.50]	2.900 [73.66]	90	1-530743-9
	8	1 40	M55302/117-07	1.790 [45.47]	2.470 [62.74]	2.400 [60.96]	1.950 [49.53]	39	2.250 [57.15]	2.650 [67.31]	80	1-530743-8
	8	1 35	M55302/117-06	1.540 [39.12]	2.220 [56.39]	2.150 [54.61]	1.700 [43.18]	34	2.000 [50.80]	2.400 [60.96]	70	1-530743-7
	8	1 30	M55302/117-05	1.290 [32.77]	1.970 [50.04]	1.900 [48.26]	1.450 [36.83]	29	1.750 [44.45]	2.150 [54.61]	60	1-530743-6
	8	1 25	M55302/117-04	1.040 [26.42]	1.720 [43.69]	1.650 [41.91]	1.200 [30.48]	24	1.500 [38.10]	1.900 [48.26]	50	1-530743-5
	8	1 20	M55302/117-03	.790 [20.07]	1.470 [37.34]	1.400 [35.56]	.950 [24.13]	19	1.250 [31.75]	1.650 [41.91]	40	1-530743-4
	8	1 15	M55302/117-02	.540 [13.72]	1.220 [30.99]	1.150 [29.21]	.700 [17.78]	14	1.000 [25.40]	1.400 [35.56]	30	1-530743-3
	8	1 10	M55302/117-01	.290 [7.37]	.970 [24.64]	.900 [22.86]	.450 [11.43]	9	.750 [19.05]	1.150 [29.21]	20	1-530743-2
SUPSD BY 2--2												1-530743-1
SUPSD BY 2--1												1-530743-0
SUPSD BY 2--0												530743-9
SUPSD BY 1--9												530743-8
SUPSD BY 1--8												530743-7
SUPSD BY 1--7												530743-6
SUPSD BY 1--6												530743-5
SUPSD BY 1--5												530743-4
SUPSD BY 1--4												530743-3
SUPSD BY 1--3												530743-2
SUPSD BY 1--2												530743-1

DO NOT SCALE PRINT.
UNLESS SPECIFIED
DIMENSIONS IN INCHES [mm]
TOLERANCES ON ,
2 PLC DEC ± -
3 PLC DEC ± .005 [0.13]
ANGLES ± -

MATERIAL –

FINISH –

DR 3-8-90 T.WIEST
CHK 6-21-90 A.HOKE
APPD 6-21-90 D.STONER
APPD 6-21-90 D.STONER
PRODUCT SPEC –
APPLICATION SPEC –
WEIGHT –

AMP INCORPORATED
Harrisburg, Pa. 17105

NAME
PIN HEADER ASSY, MINI-BOX,
RIGHT ANGLE, MILITARY

SIZE D | CAGE CODE 00779 | DRAWING NO 530743
SCALE 4:1 | SHEET 1 OF 1

CUSTOMER DRAWING